TECHNICAL FEATURES :

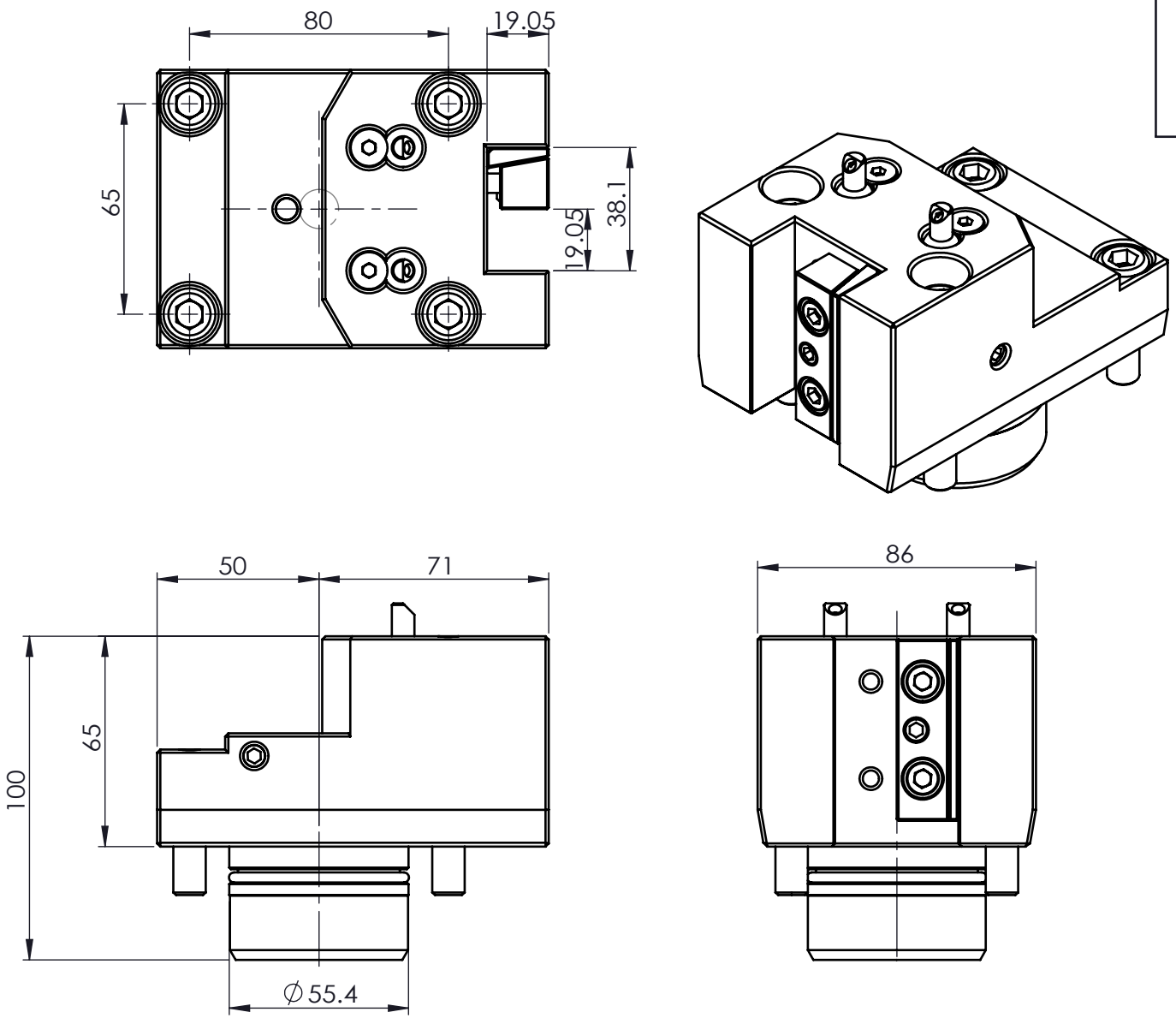

Machine type :
LT2000EX

豪力輝工業股份有限公司
HOLD WELL INDUSTRIAL CO.,LTD
E-mail : sales@mail.holdwell.com
http ://www.holdwell.com

品號 Model No.	THL-KT2-C1-55.419.05
品名 Description	Okuma55.4-W19.05單刃端面刀座C1 Okuma55.4-W19.05 Single Face and OD Tool Holder C1