TECHNICAL FEATURES :

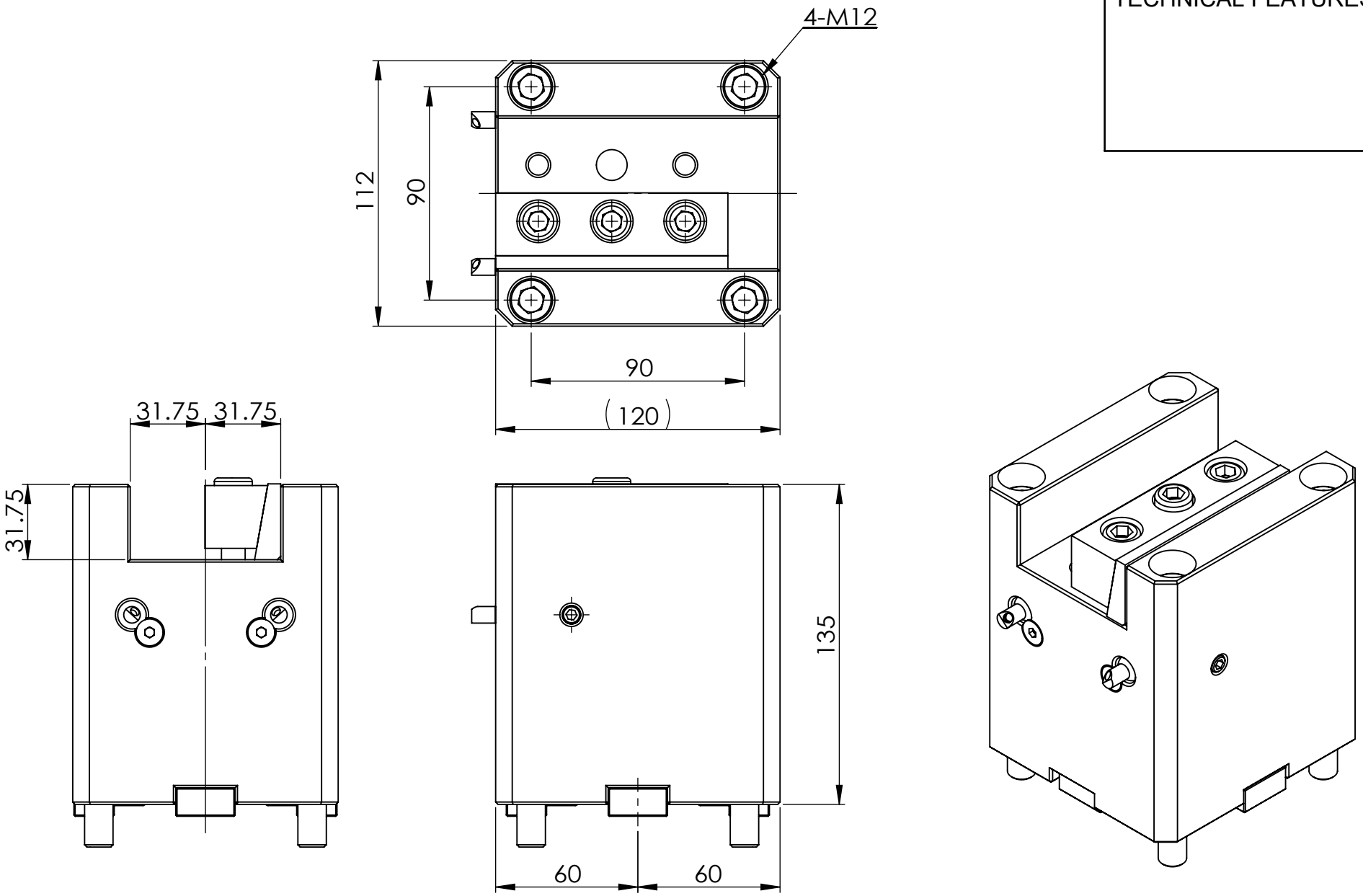

Machine type :

PUMA 400 - PUMA 480M/LM/XLM - V550M
VT 750M/TM

豪力輝工業股份有限公司
HOLD WELL INDUSTRIAL CO.,LTD
E-mail : sales@mail.holdwell.com
http ://www.holdwell.com

品號 Model No.	THL-DPM-B1-7531.75
品名 Description	BMT75-W31.75單刃端面刀座B1 BMT75-W31.75 Face and ID Tool Holder B1