TECHNICAL FEATURES :

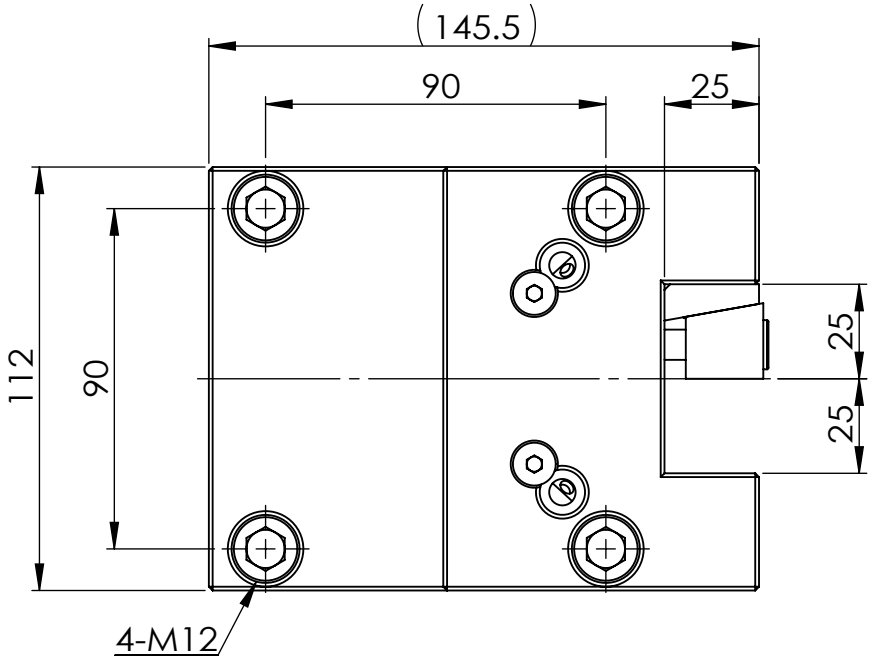

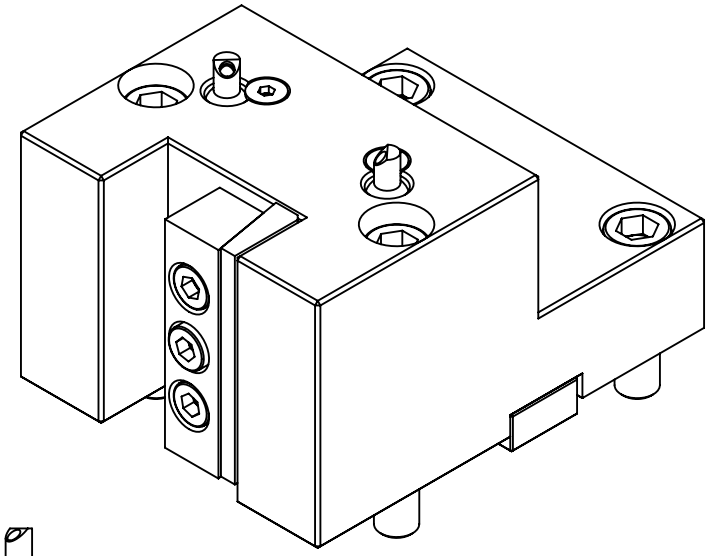

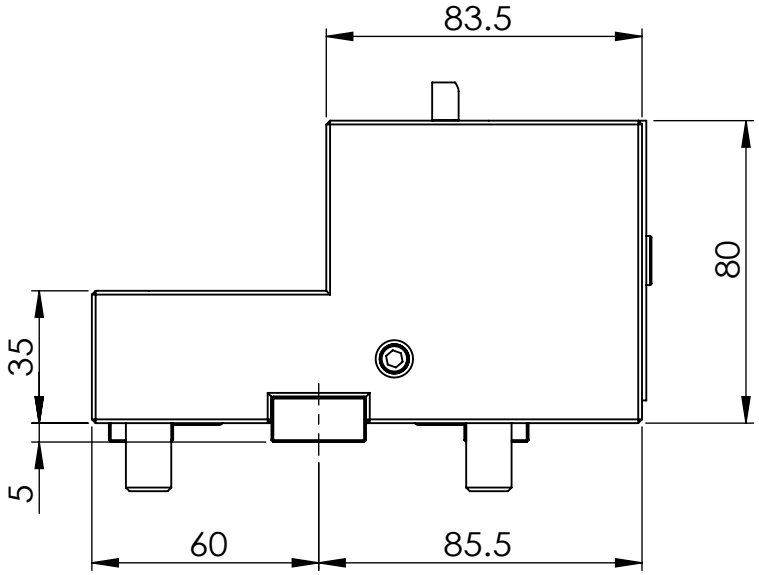

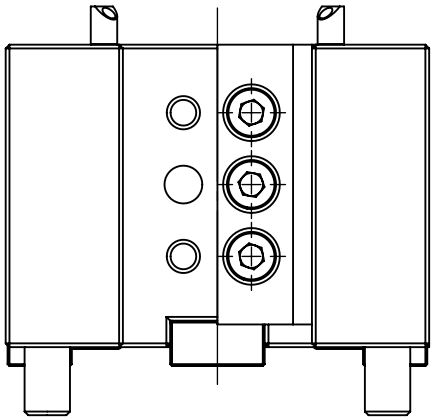

Machine type :
PUMA 400 - PUMA 480M/LM/XLM - V550M
VT 750M/TM

豪力輝工業股份有限公司
HOLD WELL INDUSTRIAL CO.,LTD
E-mail : sales@mail.holdwell.com
http ://www.holdwell.com

品號 Model No.	THL-DPM-C1-7525
品名 Description	BMT75-W25單刃端面刀座C1 BMT75-W25 Axial Tool Holder C1