TECHNICAL FEATURES :

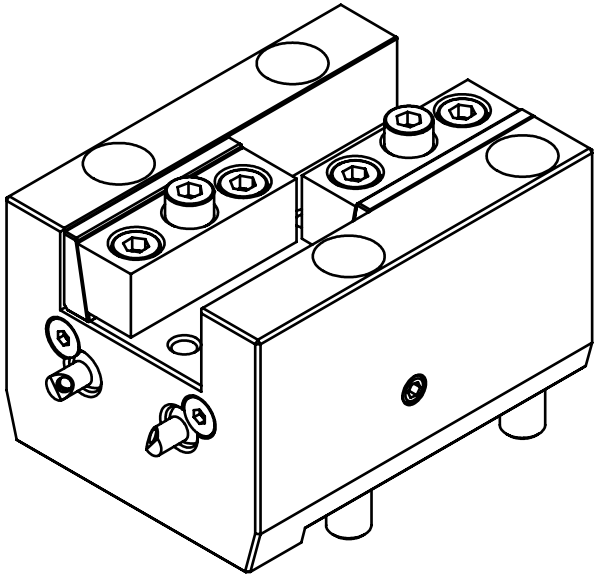

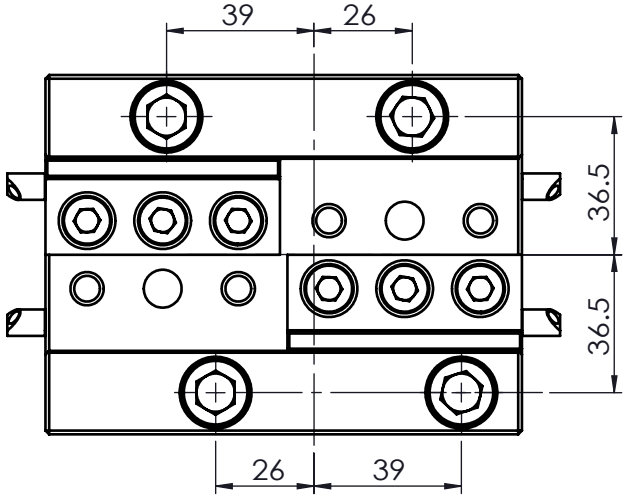

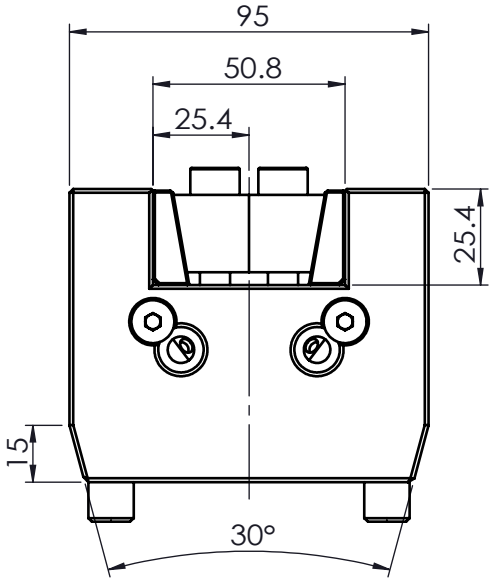

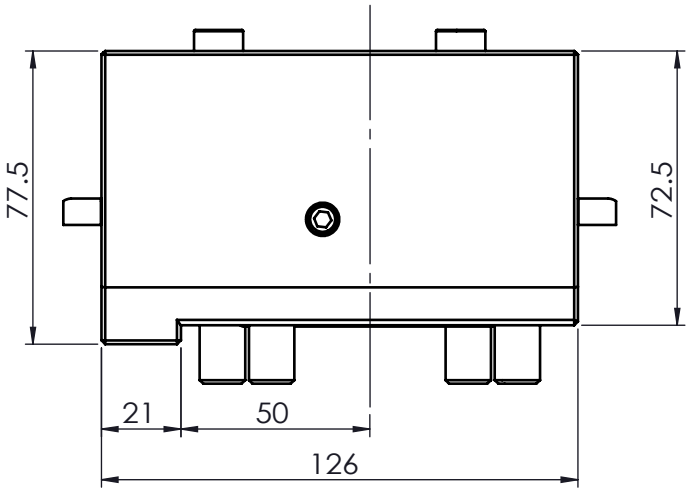

Machine type :

LB2000EX - LB3000EX

豪力輝工業股份有限公司
HOLD WELL INDUSTRIAL CO.,LTD
E-mail : sales@mail.holdwell.com
http ://www.holdwell.com

品號 Model No.	THL-KB2-B2-6025.4
品名 Description	Okuma60-W25.4端面刀座B2 Okuma60-W25.4 Face and ID Tool Holder B2