TECHNICAL FEATURES :

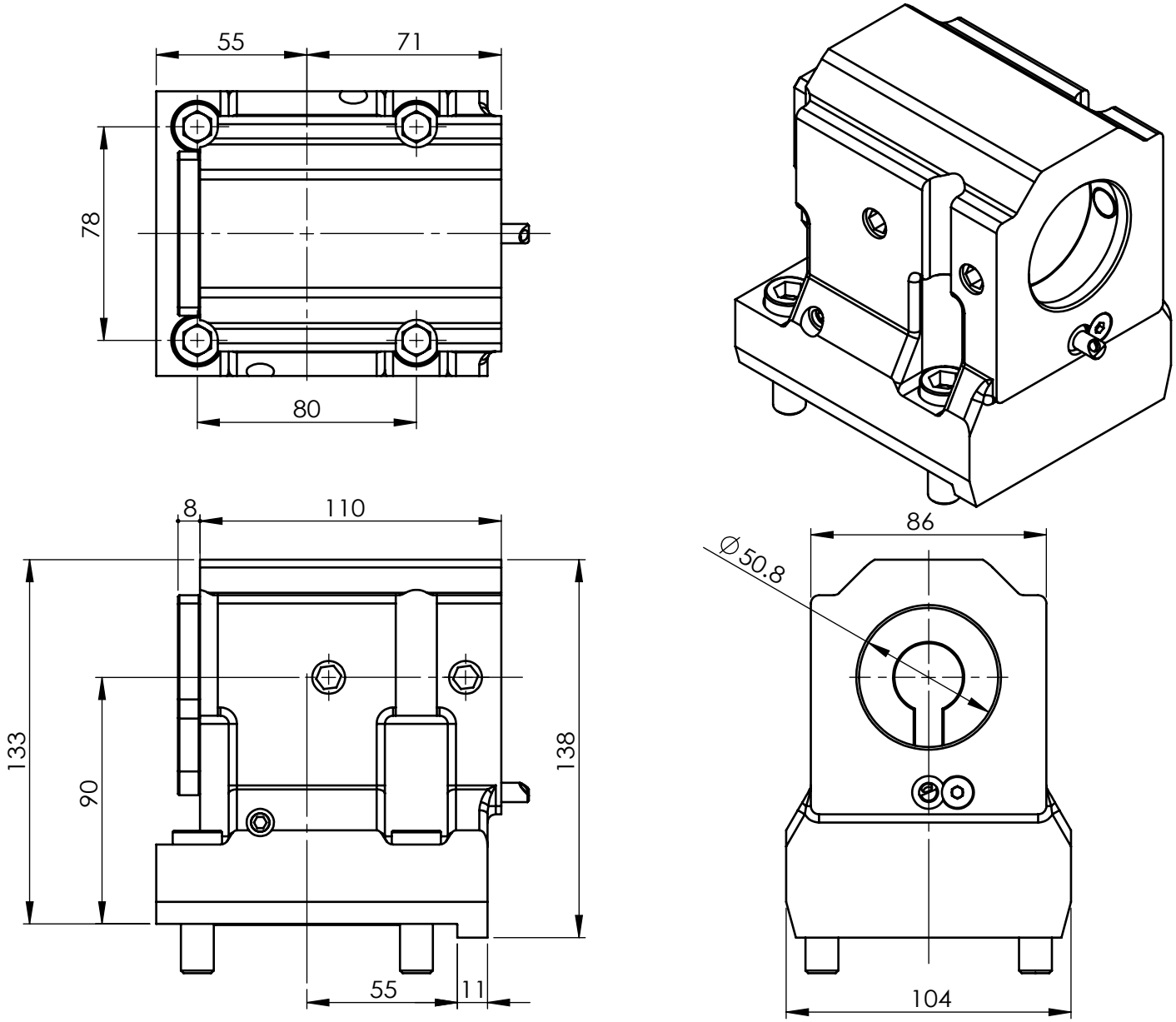

Machine type :
LB4000EX

豪力輝工業股份有限公司
HOLD WELL INDUSTRIAL CO.,LTD
E-mail : sales@mail.holdwell.com
http ://www.holdwell.com

品號 Model No.	THL-KB4-T1-6050.890-I
品名 Description	Okuma60-SLA50.8徑向內孔刀座_中水T1 Okuma60-SLA50.8 Boring Bar Tool Holder 90mm_I.C. T1